DocuSign Envelope ID: A1BDB250-1077-4987-95A5-5178453319E9

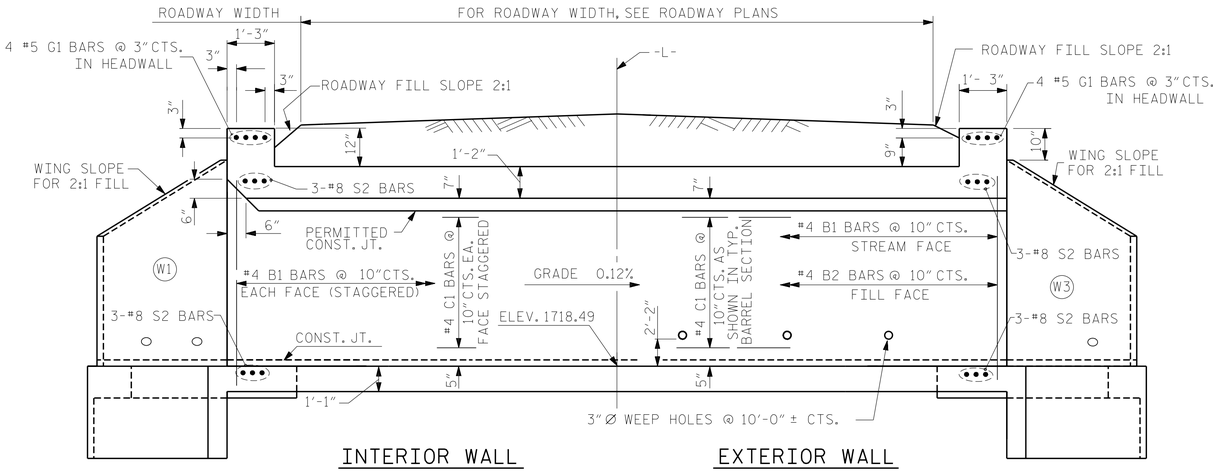

CULVERT SECTION NORMAL TO ROADWAY

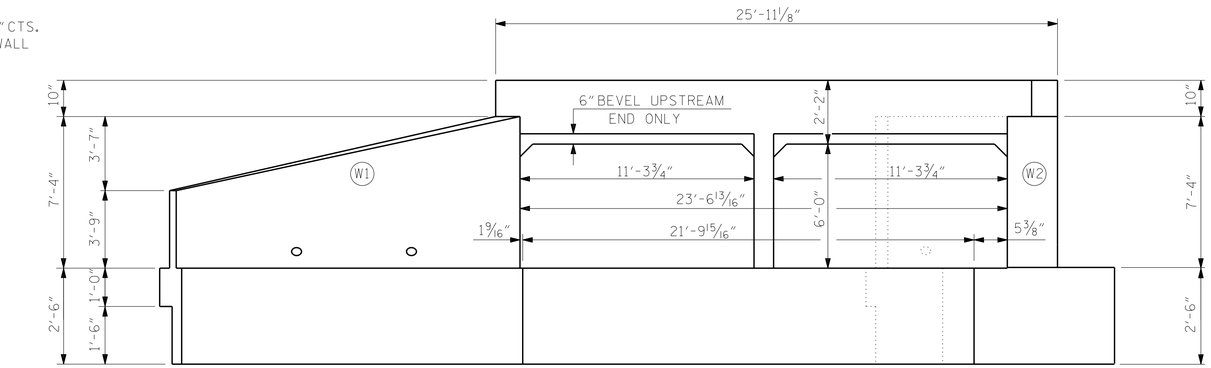

END ELEVATION NORMAL TO SKEW

UPSTREAM END SHOWN, DOWNSTREAM END SIMILAR.

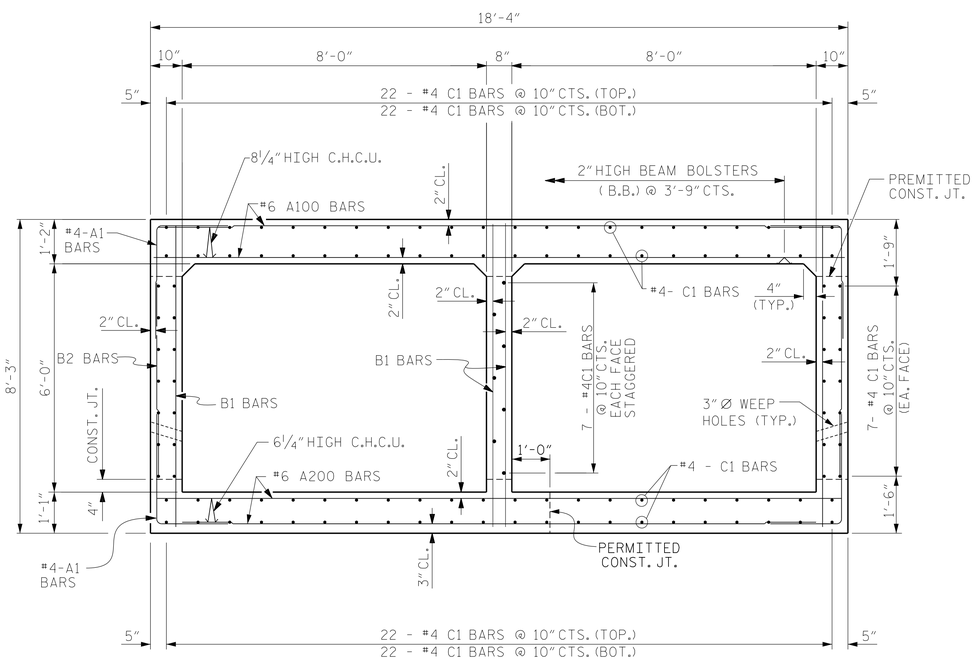

RIGHT ANGLE SECTION OF BARREL

THERE ARE 123 "C" BARS IN SECTION OF BARREL.

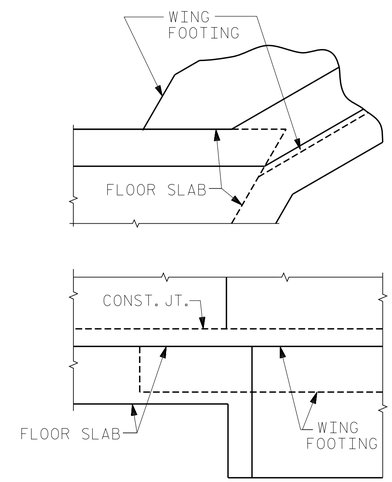

DETAIL

CONNECTION OF WING FOOTING AND FLOOR SLAB WHEN SLAB IS THICKER THAN FOOTING

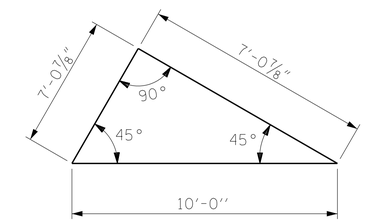

SKEW TRIANGLE

PROJECT NO. 14SP.20201.1

CHEROKEE COUNTY

STATION: 11+97.95 -L-

SHEET 2 OF 11

REVISED FINAL 02/03/17

DOCUMENT NOT CONSIDERED FINAL UNLESS ALL SIGNATURES COMPLETED

Vaughn & Melton
Consulting Engineers
Asheville, North Carolina
828-253-2796
Tri-Cities, TN 423-467-8401
Knoxville, TN 865-546-5800
Spartanburg, SC 864-574-4775
Charleston, SC 843-974-5650
Middlesboro, KY 606-248-6600
Atlanta, GA 770-627-3509
Charlotte, NC 704-357-0488
Boone, NC 828-355-9933

Copyright © 2006 Vaughn & Melton, Inc. All Rights Reserved

NORTH CAROLINA PROFESSIONAL SEAL 20971 ENGINEER HARDY L. WILLIS
7/20/2018 1:49:14 PM EDT

STATE OF NORTH CAROLINA
DEPARTMENT OF TRANSPORTATION
RALEIGH

DOUBLE BARREL
8' X 6' RCBC
ALONG BATES CREEK
ON SR 1348 (BATES CREEK ROAD)
NEAR INTERSECTION WITH PEAR LANE

REVISIONS						SHEET NO.
NO.	BY:	DATE:	NO.	BY:	DATE:	C-2
1			3			TOTAL SHEETS
2			4			11

STD. NO. CB442

ENG. OF RECORD: RYAN T. SHIPMAN

ASSEMBLED BY : ARTHUR WILLIAMS DATE : FEB. 2016
CHECKED BY : HARDY L. WILLIS DATE : FEB. 2016

DRAWN BY : RALPH D. UNDERWOOD DATE : APR. 1972
CHECKED BY : HASON A. JUDEH DATE : MAY 1972

SPECIAL

STANDARD

REVISED 11-19-99 BY M.A.M. CHECKED BY R.W.W.
REDRAWN NOV.1990 BY D.P.D. CHECKED BY M.A.J.