DocuSign Envelope ID: A1BDB250-1077-4987-95A5-5178453319E9

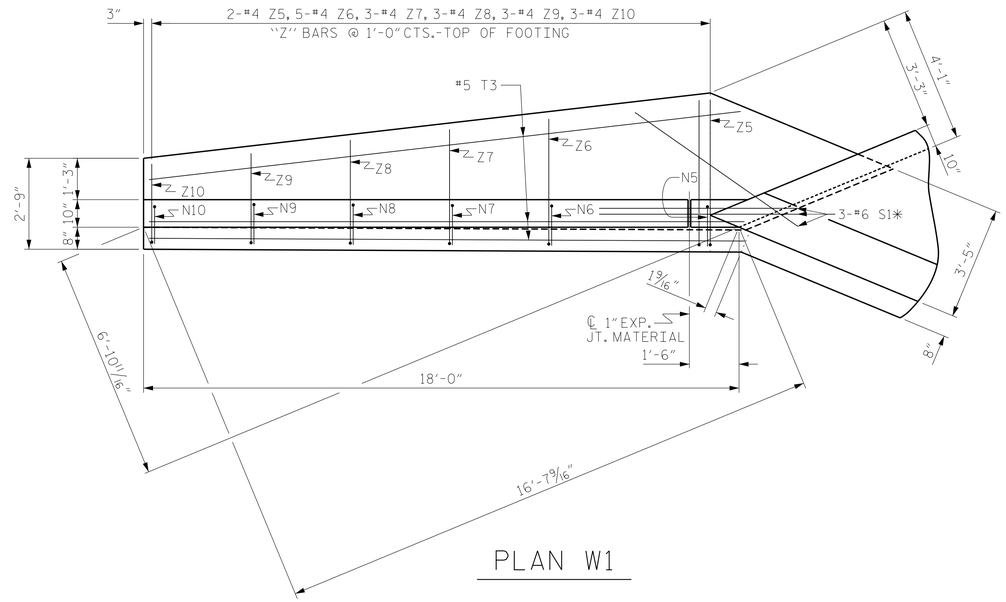

PLAN W1

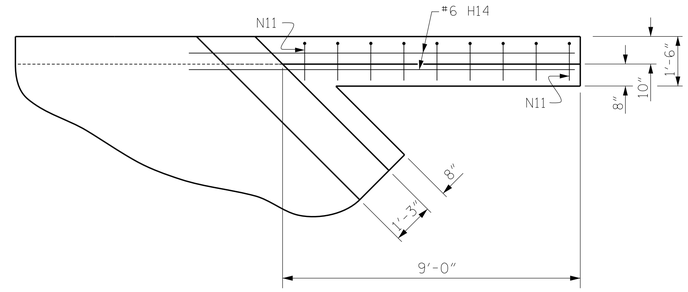

PLAN W2

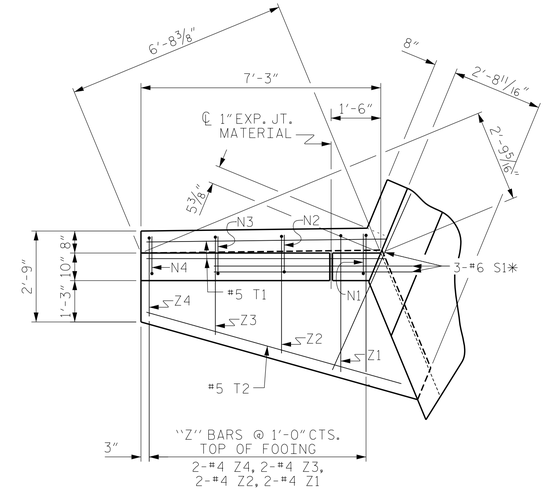

* S1 BARS @ BOTTOM OF FLOOR SLAB & FOOTING

PLAN W3

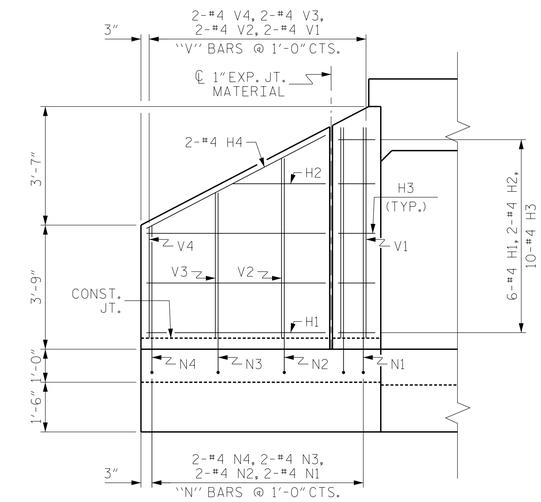

ELEVATION W3

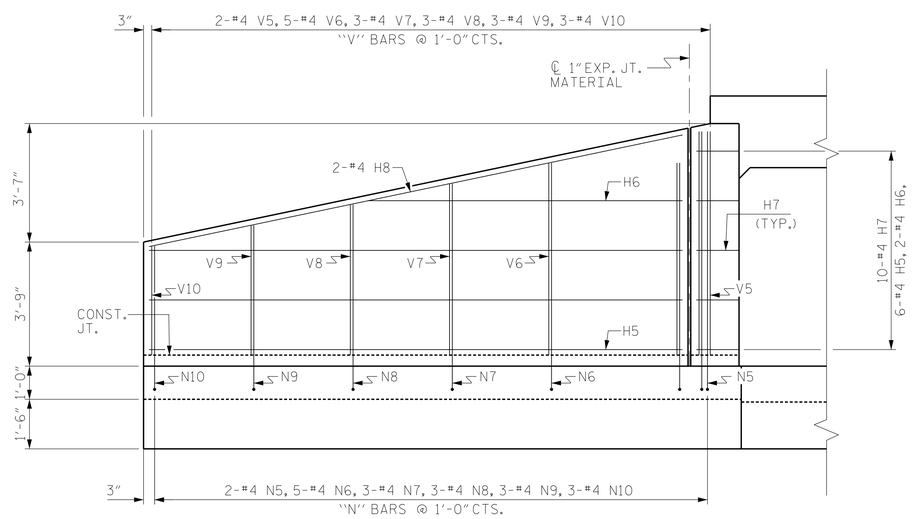

ELEVATION W1

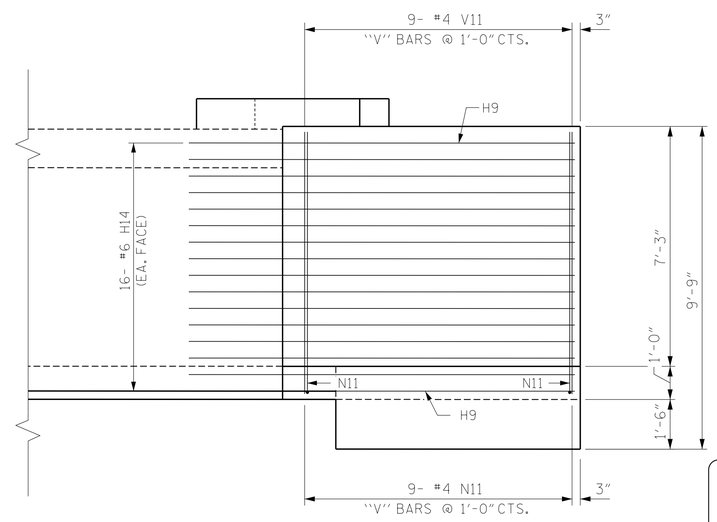

ELEVATION W2

REVISED FINAL
02/03/17

DOCUMENT NOT CONSIDERED FINAL UNLESS ALL SIGNATURES COMPLETED

PROJECT NO. 14SP.20201.1

CHEROKEE COUNTY

STATION: 11+97.95 -L-

SHEET 7 OF 11

V&M
Vaughn & Melton
Consulting Engineers
Asheville, North Carolina
828-253-2796
Raleigh, NC 919-977-9455
Charlotte, NC 704-357-0488
Boone, NC 828-355-9933
Tri-Cities, TN 423-467-8401
Knoxville, TN 865-546-5800
Spartanburg, SC 864-574-4775
Charleston, SC 843-974-5650
Middlesboro, KY 606-248-6600
Atlanta, GA 770-627-3509
Copyright © 2006 Vaughn & Melton, Inc. All Rights Reserved

NORTH CAROLINA PROFESSIONAL SEAL 20317 ENGINEER HARDY L. WILLIS
7/20/2018 1:49:14 PM EDT

STATE OF NORTH CAROLINA
DEPARTMENT OF TRANSPORTATION
RALEIGH

WING DETAILS FOR CONCRETE BOX CULVERT

H = 6'-0" SLOPE = 2:1
45° OR 135° SKEW

DRAWN BY: AW	DATE: 02/2016	
CHECKED BY: HLW	DATE: 02/2016	
ENG. OF RECORD: RTS	DATE: 02/2016	

REVISIONS						SHEET NO.
NO.	BY:	DATE:	NO.	BY:	DATE:	C-7
1			3			TOTAL SHEETS
2			4			11