DocuSign Envelope ID: A1BDB250-1077-4987-95A5-5178453319E9

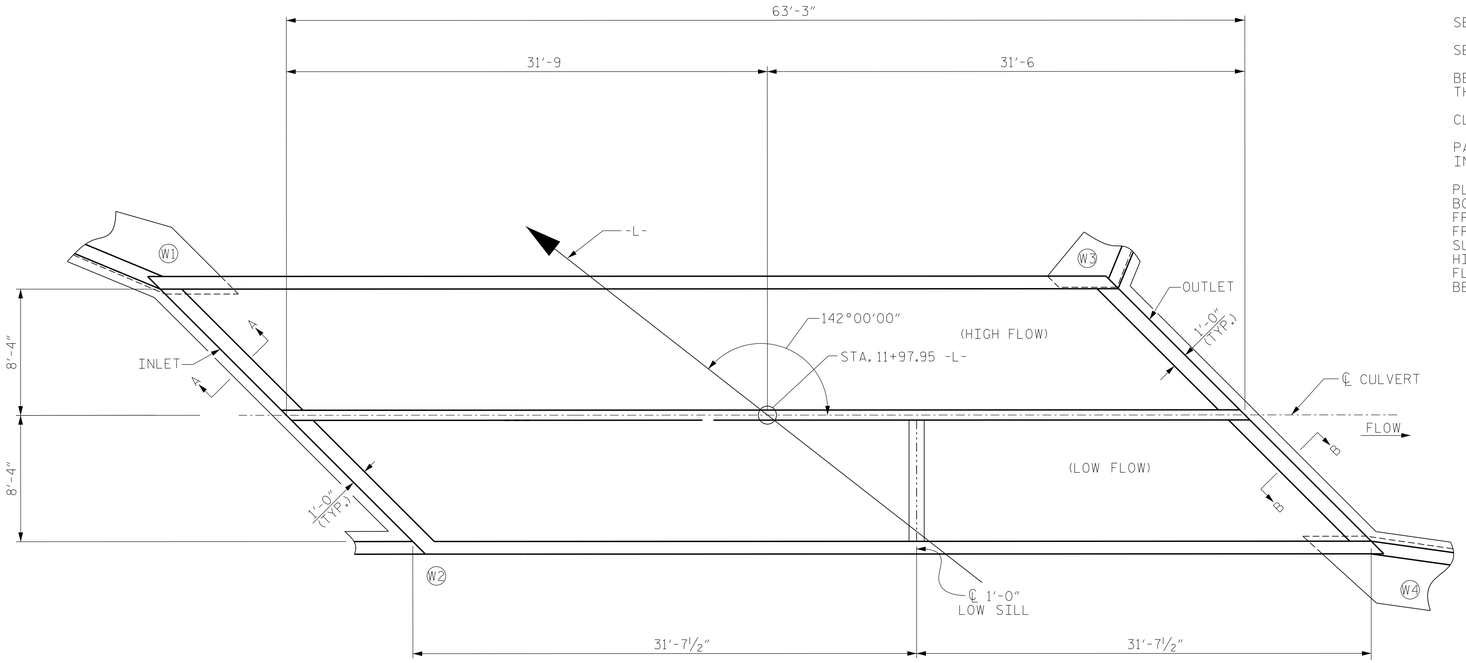

CULVERT SILL LAYOUT

NOTES

SEE SHEET C-6 FOR SILL CONCRETE QUANTITY

SEE SHEET C-6 BAR SCHEDULE FOR DOWELS

BED MATERIAL SHALL BE EXCAVATED AND STOCKPILED DURING INTSTALLATION OF THE CULVERT AND SILLS. THE NATURAL BED MATERIALS SHALL THEN BE PLACED IN THE CULVERT TO THE SPECIFIED ELEVATION.

CLASS I RIP-RAP MAY BE USED TO SUPPLEMENT BED MATERIAL.

PAYMENT TO PLACE THE EXCAVATED MATERIAL OR SUPPLEMENT WITH CLASS I RIP RAP MATERIAL SHALL BE INCLUDED IN THE LUMP SUM BID PRICE FOR "CULVERT EXCAVATION".

PLACE SILLS AT INLET, OUTLET OF THE CULVERT. ADD SILL HALFWAY THOUGH LOW FLOW BARREL. BACKFILL BOTH BARRELS WITH NATURAL BED MATERIAL. NATIVE MATERIAL CONSISTS OF MATERIAL THAT IS EXCAVATED FROM THE STREAM BED AT PROJECT SITE DURING CULVERT CONSTRUCTION. ONLY MATERIAL THAT IS EXCAVATED FROM THE STREAM BED MAY BE USED TO LINE THE LOW FLOW CULVERT BARREL. RIP RAP MAY BE USED TO SUPPLEMENT THE NATIVE MATERIAL IN THE HIGH FLOW CULVERT BARREL. IF RIP RAP IS USED TO LINE THE HIGH FLOW CULVERT BARREL, NATIVE MATERIAL SHOULD BE PLACED ON TOP TO FILL VOIDS AND PROVIDE A FLAT SURFACE FOR ANIMAL PASSAGE. NATIVE MATERIAL IS SUBJECT TO APPROVAL BY THE ENGINEER AND MAY BE SUBJECT TO PERMIT CONDITIONS.

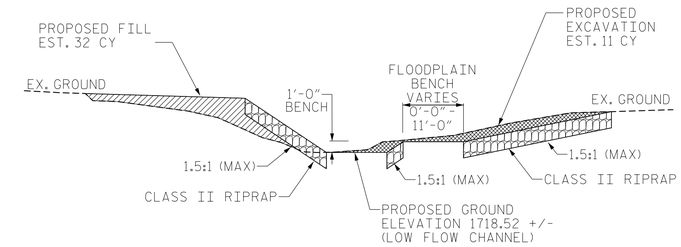

INLET CHANNEL & FLOODPLAIN BENCH PROFILE (LOOKING UPSTREAM)

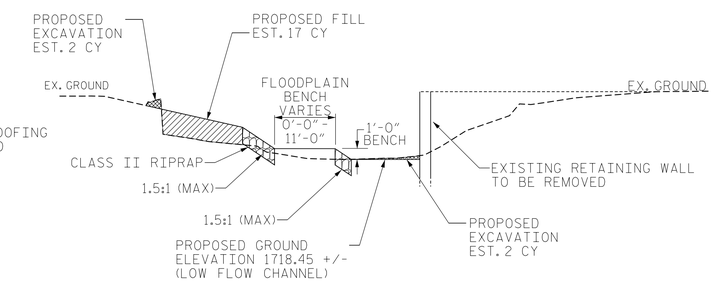

OUTLET CHANNEL & FLOODPLAIN BENCH PROFILE (LOOKING DOWNSTREAM)

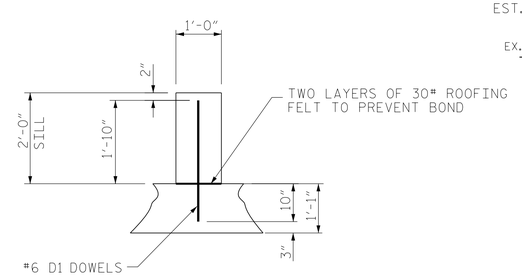

SECTION "A-A"

DOWELS MAY BE PUSHED INTO GREEN CONCRETE AFTER SLAB HAS BEEN FLOATED.

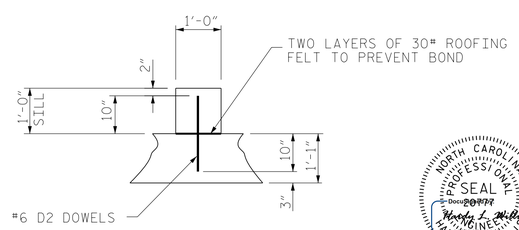

SECTION "B-B"

DOWELS MAY BE PUSHED INTO GREEN CONCRETE AFTER SLAB HAS BEEN FLOATED.

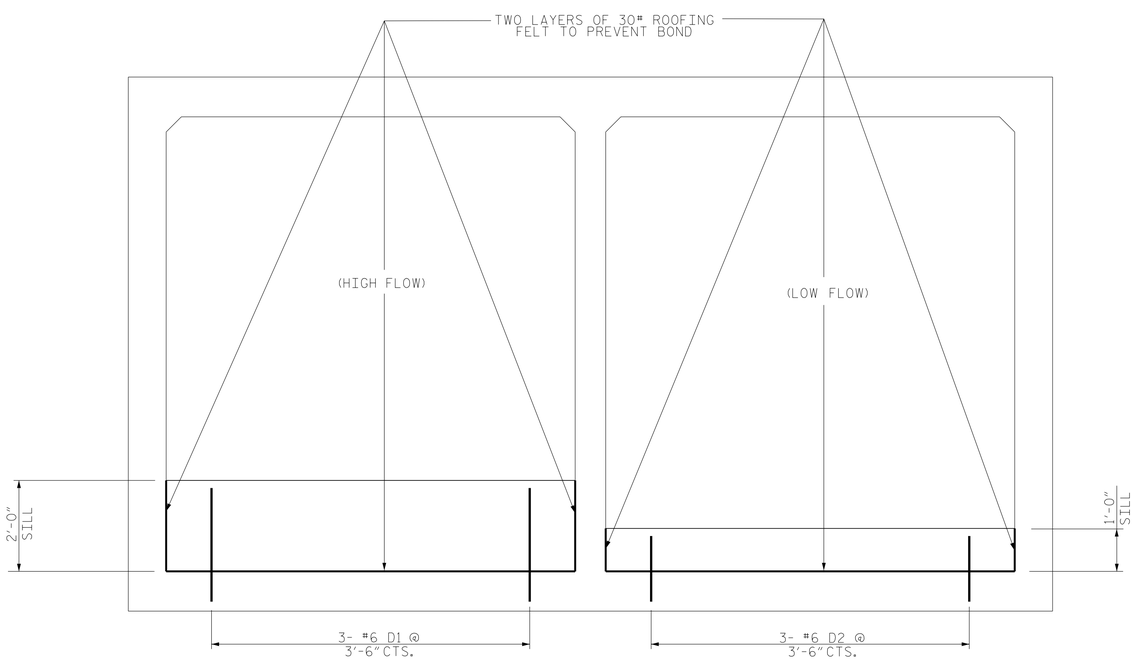

END ELEVATION

LOOKING DOWNSTREAM

REVISED FINAL
02/03/17

DOCUMENT NOT CONSIDERED FINAL UNLESS ALL SIGNATURES COMPLETED

NORTH CAROLINA PROFESSIONAL SEAL 20177 ENGINEER RANDY L. WILLIS
7/20/2018 1:49:14 PM EDT

V&M
Vaughn & Melton
Consulting Engineers
Asheville, North Carolina
828-253-2796
Charlotte, NC 704-357-0488
Boone, NC 828-355-9933
Tri-Cities, TN 423-467-8401
Knoxville, TN 865-546-5800
Spartanburg, SC 864-574-4775
Charleston, SC 843-974-5650
Middlesboro, KY 606-248-6600
Atlanta, GA 770-627-3509
Copyright © 2006 Vaughn & Melton, Inc. All Rights Reserved

PROJECT NO. 14SP.20201.1

CHEROKEE COUNTY

STATION: 11+97.95 -L-

SHEET 5 OF 11

STATE OF NORTH CAROLINA
DEPARTMENT OF TRANSPORTATION
RALEIGH

DOUBLE BARREL
8' X 6' RCBC
ALONG BATES CREEK
ON SR 1348 (BATES CREEK ROAD)
NEAR INTERSECTION WITH PEAR LANE

DRAWN BY: AW	DATE: 02/2016	
CHECKED BY: HLW	DATE: 02/2016	
ENG. OF RECORD: RTS	DATE: 02/2016	

REVISIONS						SHEET NO.
NO.	BY:	DATE:	NO.	BY:	DATE:	C-5
1			3			TOTAL SHEETS
2			4			11